ARI-Materials

Premium Building Materials | Austin, TX

System
ARI System 60 — 60 mm

Drawing
Profile Section

Scale: **5:1** | Frame depth: **60 mm** | Finish: **Matt black powder coat** | Sheet: **S60-CDD-01**

Casement Door · Double Swing

Horizontal & vertical profile sections · scale 5:1

U 0.35 · SHGC 0.17
System 60 · T-30 Low-E · NFRC est.

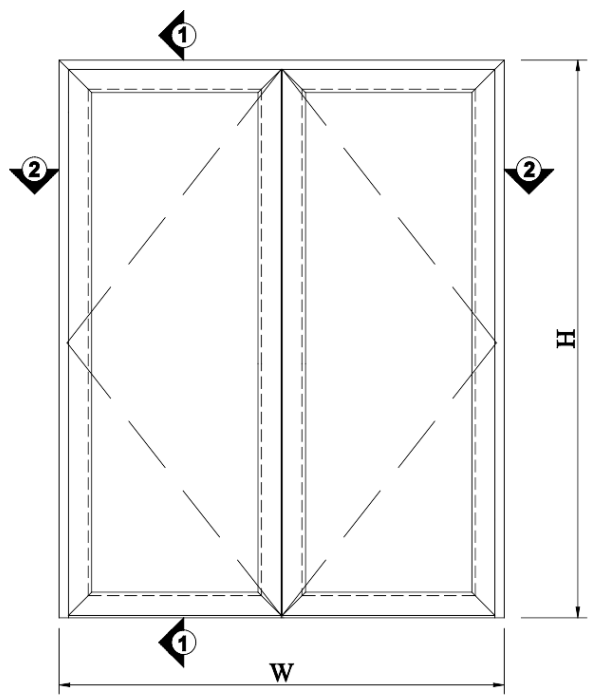

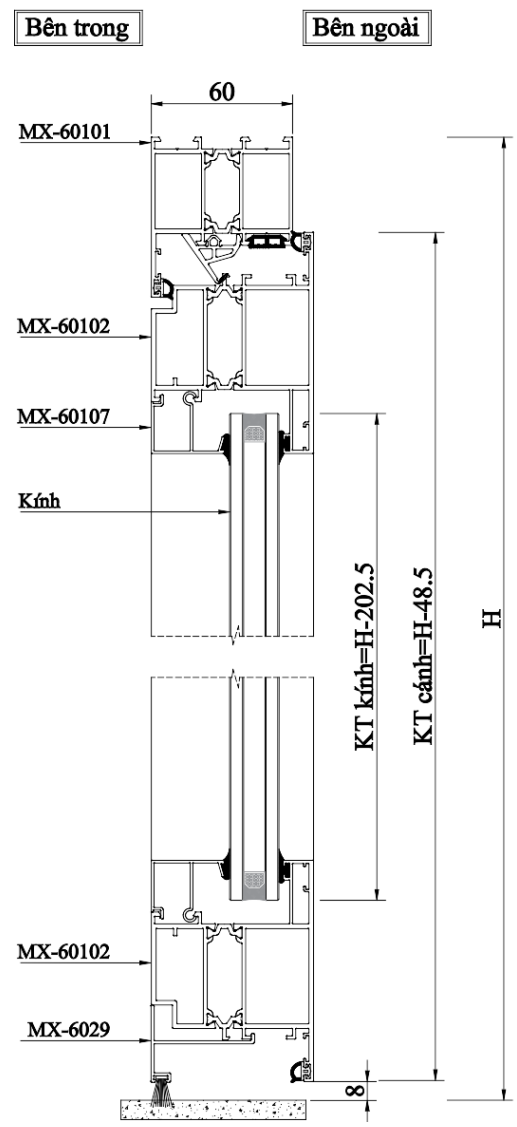

Mặt cắt 1-1

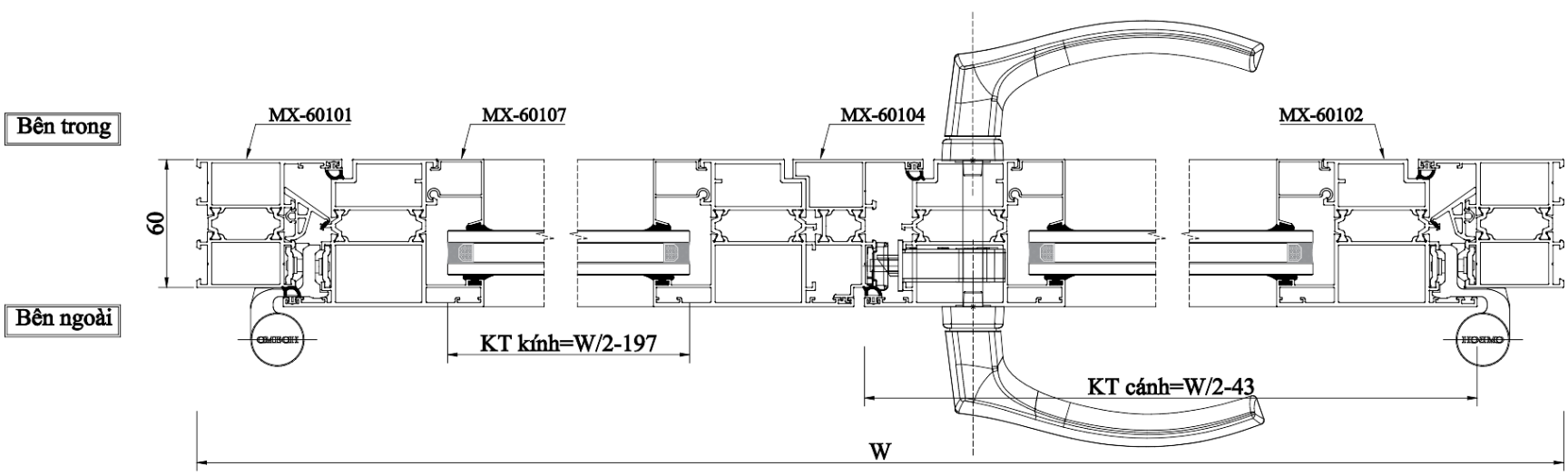

Mặt cắt 2-2